ICOM INSTRUCTIONS

TRUNKING/NETWORK CONTROLLER

UC-FR5300

Thank you for choosing this Icom product.
READ ALL INSTRUCTIONS carefully and completely before using this product.

EXPLICIT DEFINITIONS

WORD	DEFINITION
⚠ **WARNING!**	Personal injury, fire hazard or electric shock may occur.
CAUTION	Equipment damage may occur.
NOTE	Recommended for optimum use. No risk of personal injury, fire or electric shock.

Icom is not responsible for the destruction, damage to, or performance of any Icom or non-Icom equipment, if the malfunction is because of:
- Force majeure, including, but not limited to, fires, earthquakes, storms, floods, lightning, other natural disasters, disturbances, riots, war, or radioactive contamination.
- The use of Icom transceivers with any equipment that is not manufactured or approved by Icom.

Icom and the Icom logo are registered trademarks of Icom Incorporated (Japan) in Japan, the United States, the United Kingdom, Germany, France, Spain, Russia, Australia, New Zealand, and/or other countries.

Icom Inc.
1-1-32 Kamiminami, Hirano-ku,
Osaka 547-0003, Japan
May 2025

A7583W-1EX-8
Printed in Japan
© 2020–2025 Icom Inc.

PRECAUTIONS

⚠ **WARNING!** Turn OFF the repeater before installing the controller. Otherwise, this could cause a fire or damage the repeater.

CAUTION: NEVER expose the repeater or controller to rain, snow or any liquids.

CAUTION: NEVER let metal, wire or other objects touch any parts on the controller.

CAUTION: NEVER install the controller into a non-specified repeater.

BE CAREFUL! When you install the controller, wear gloves to avoid cutting your hand on the sharp edges of the repeater.

◇ CF card caution

⚠ **WARNING! NEVER** insert the CF card into the UC-FR5300 when the repeater's power is ON. Otherwise a fire, electric shock may occur, or the data on the CF card may become corrupted.

CAUTION: DO NOT insert the CF card into the UC-FR5300 if dust or dirt is on the connector. This may cause the CF card, and the UC-FR5300, to malfunction.

CAUTION: DO NOT directly touch the connector part of the CF card. It may cause a breakdown of the internal circuit by static electricity.

CAUTION: DO NOT turn OFF the repeater while the data is being transferred. Otherwise, the data on the CF card may become corrupted.

CAUTION: DO NOT use the CF card in a controller other than the UC-FR5300. Inserting the CF card into other equipment may corrupt the card's data.

CAUTION: DO NOT keep the CF card in areas with extremely high temperatures, high humidity, or in direct sunlight.

BE CAREFUL! DO NOT submerge the CF card in water, or get it wet.

BE CAREFUL! DO NOT bend the CF card.

BE CAREFUL! DO NOT drop or strike the CF card against another object.

CONFIGURATIONS

The controller enables the repeater to be used for the following modes, depending on the configurations.

(As of May 2025)

		UC-FR5300 #11	UC-FR5300 #12	UC-FR5300 #13	UC-FR5300 #14
CF card		–	CF-FR5000MC	CF-FR5000MT	CF-FR5300SC
Single Site	Trunking	✓	✓	✓	✓
Multi Site	Conventional	–*1	✓	✓	✓
	Trunking	–*2	–*2	✓	–*2
Simulcast		–*3	–*3	–*3	✓

*1 Either the optional CF-FR5000MC, CF-FR5000MT or CF-FR5300SC is required.
*2 The optional CF-FR5000MT is required.
*3 The optional CF-FR5300SC is required.

FCC INFORMATION

This equipment has been tested and found to comply with the limits for a Class B digital device, pursuant to part 15 of the FCC Rules. These limits are designed to provide reasonable protection against harmful interference in a residential installation. This equipment generates, uses, and can radiate radio frequency energy and, if not installed and used in accordance with the instructions, may cause harmful interference to radio communications. However, there is no guarantee that interference will not occur in a particular installation. If this equipment does cause harmful interference to radio or television reception, which can be determined by turning the equipment off and on, the user is encouraged to try to correct the interference by one or more of the following measures:
- Reorient or relocate the receiving antenna.
- Increase the separation between the equipment and receiver.
- Connect the equipment into an outlet on a circuit different from that to which the receiver is connected.
- Consult the dealer or an experienced radio/TV technician for help.

◇ FCC SDoC

This device complies with Part 15 of the FCC Rules. Operation is subject to the following two conditions: (1) this device may not cause harmful interference, and (2) this device must accept any interference received, including interference that may cause undesired operation.

Responsible Party:
Company Name: Icom America Inc.
Address: 12421 Willows Road NE, Kirkland, WA 98034

U.S. Contact Information:
800-USA-ICOM (800-872-4266)
Monday – Friday 7 AM to 5 PM PST

DISPOSAL

The crossed-out wheeled-bin symbol on your product, literature, or packaging reminds you that in the European Union, all electrical and electronic products, batteries, and accumulators (rechargeable batteries) must be taken to designated collection locations at the end of their working life. Do not dispose of these products as unsorted municipal waste. Dispose of them according to the laws in your area.

ABOUT CE

CE Versions of the UC-FR5300, which have the "CE" symbol on the product, comply with the essential requirements of the 2014/30/EU EMC Directive and 2011/65/EU RoHS Directive.

Below statement is for UKCA purpose only
United Kingdom Authorised Importer:
Icom (UK) Ltd.
Address: Blacksole House, Altira Park, Herne Bay, Kent, CT6 6GZ, U.K.
To obtain the UKCA Declaration of Conformity, please contact Icom UK Limited by email at info@icomuk.co.uk or alternatively call + 44(0) 1227 741741.

SUPPLIED ACCESSORIES

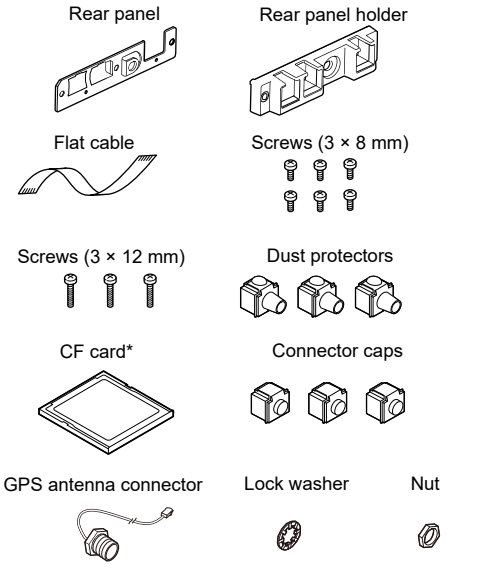

*Supplied or not depends on the controller's version.

OPTION

CF-FR5000MC CF CARD
Same as that supplied with UC-FR5300 #12.

CF-FR5000MT CF CARD
Same as that supplied with UC-FR5300 #13.

CF-FR5300SC CF CARD
Same as that supplied with UC-FR5300 #14.

UX-241 GPS ANTENNA

AH-38 SATELLITE ANTENNA
ⓘ The coaxial cable (purchase separately) is required to connect the AH-38.

DISASSEMBLING THE UNITS

1. Unscrew the seven screws on the top, and the two screws on both sides of the repeater, then slide the top cover off in the direction of the arrow.

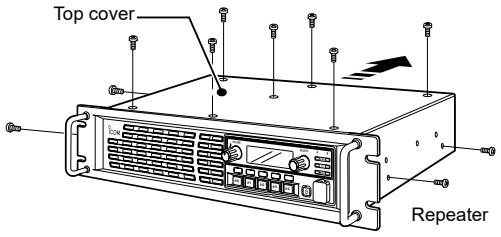

2. Disconnect the control cable from the channel module. Unscrew the seven screws that affix the channel module to the repeater chassis, and then remove it.

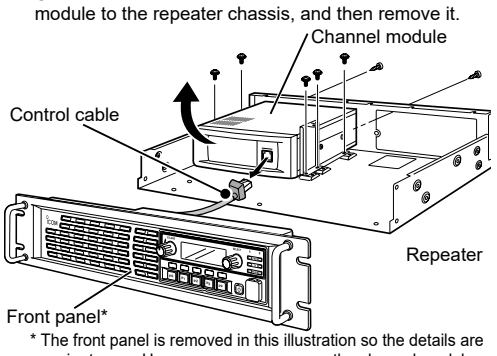

* The front panel is removed in this illustration so the details are easier to see. However, you can remove the channel module without removing the front panel of the repeater.

3. Unscrew the eight screws from the top, the nine screws from the bottom, and the three screws from rear of the channel module. Then remove each cover.

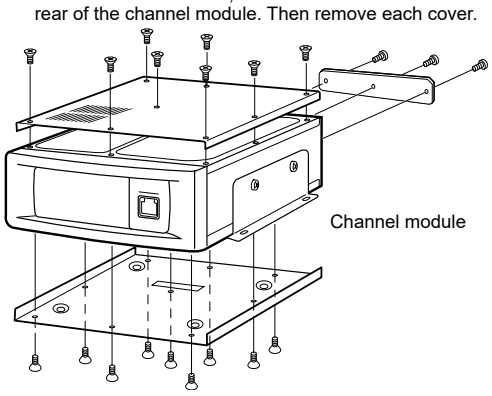

INSERTING AND REMOVING THE CF CARD

◇ Inserting

NOTE: Be sure to insert the CF card with the serial label (Example: "CF-FR5300SC" label) facing up.

Slowly insert the CF card into the CF card slot of the UC-FR5300.
- If the CF card seems to jam, or is too tight, carefully remove it. Ensure that the card is properly oriented and that there are no obstructions in the sides of the card insertion slots, then reinsert the card.

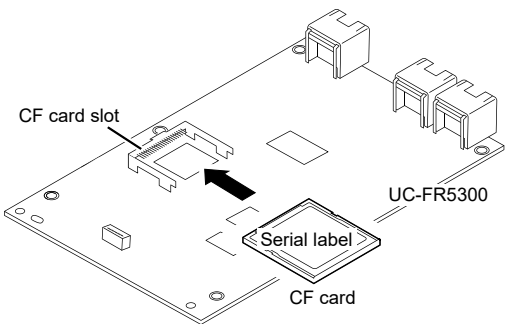

◇ Removing

Hold the edge of the CF card, and slowly pull it out.

NOTE: When no CF card is inserted, the UC-FR5300 cannot be used for Multi Site Conventional mode, Multi Site Trunking mode, and Simulcast mode operation.

INSTALLING

◇ Installing the UC-FR5300

Install the controller into the channel module using the six supplied 3 × 8 mm screws.

NOTE: BE SURE to match the holes in the controller to the projections on the channel module's chassis.

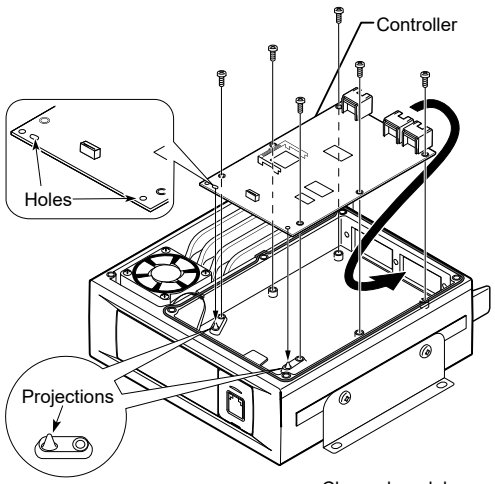

◇ Connecting the flat cable

NOTE: BE SURE to insert the flat cable with the metal strips facing the edge of the Printed Circuit Board (PCB), and not the opposite way.

1. Turn the channel module upside down.
Insert one end of the flat cable into J8 on the PCB of the channel module. Then, carefully pass the flat cable through the opening of the channel module's chassis to the top side.

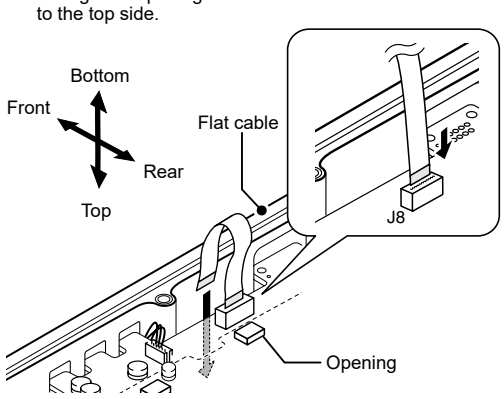

2. Turn over the channel module.
Carefully pull out the other end of the flat cable from the opening, and then insert it into J1 on the controller.

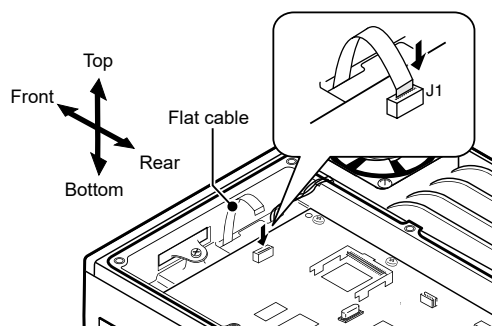

◇ Attaching the rear panel

1. Insert the supplied rear panel into the rear panel holder.
2. Attach the rear panel and holder set to the channel module using the three supplied 3 × 12 mm screws.

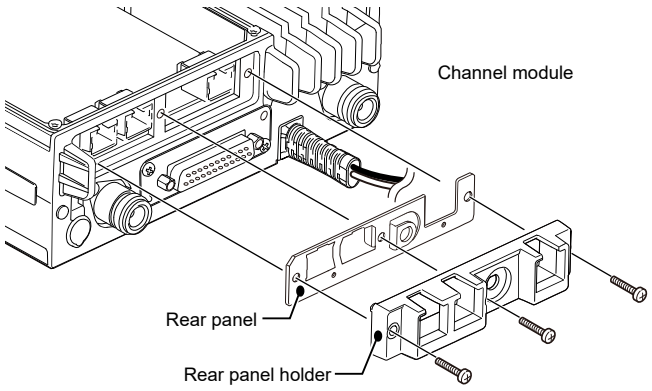

TIP: If you have installed an optional UR-FR5300/UR-FR6300 series channel extension module, an additional controller in it enables you to control each channel module from a PC in the Conventional/Trunking/Simulcast operation mode.

◇ Installing the GPS antenna connector

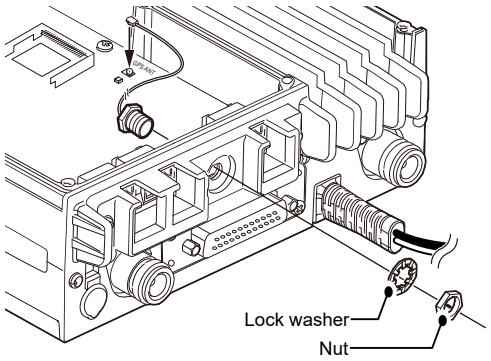

1. Insert the supplied GPS antenna connector through the GNSS hole and Lock washer.
2. Tighten the supplied nut.
3. Connect the coaxial cable to the GPS antenna connector near the CF card slot.

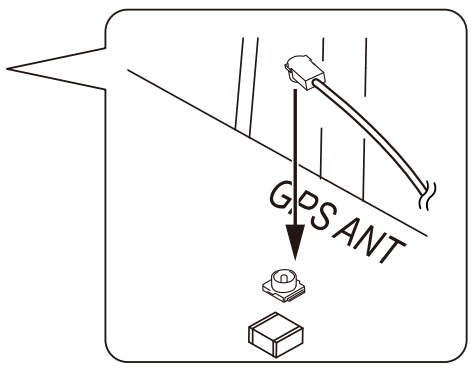

ASSEMBLING THE UNIT

1. Reattach the top and bottom covers of the channel module, and then tighten all the screws.

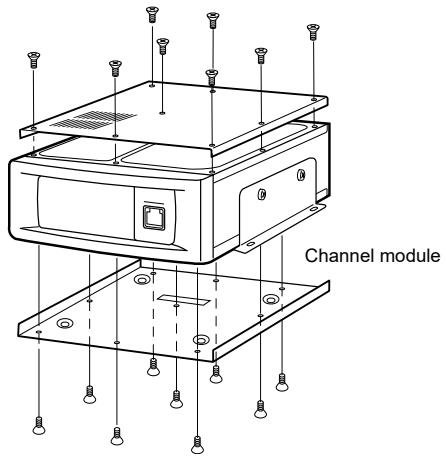

2. Reinstall the channel module and the screws to their original positions, and then connect the control cable of the repeater's front panel to the channel module.

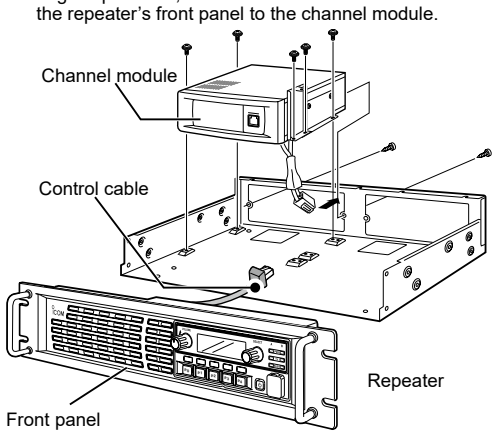

3. Reattach the top cover of the repeater, and then tighten the seven screws for the top and the two screws on both sides of the repeater.

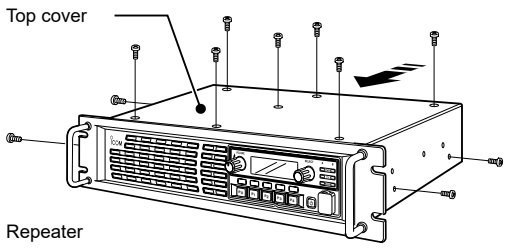

CONNECTION

NOTE:
- CAT-5 or upper straight cables are required for connection. (User supplied)
- **BE SURE** to cover each connected cable with a supplied dust protector. Even if the cable has its own cover, replace it with the supplied dust protector.
- **KEEP** the supplied connector caps attached when the connectors are not in use, to avoid getting bad contacts from dust or moisture.

Each controller has a LAN connector and two BUS connectors.

❶ **[LAN] connector**
For an Ethernet connection. Connect the controller to an Ethernet (LAN) port of a PC.
In the Simulcast mode and Trunking mode, the controller at one end of the chain must be connected. You can control the controller and all others in the chain from the PC.

❷ **[BUS] connectors (BUS-1, BUS-2)**
For data communication between the controllers in the Simulcast mode* and Trunking mode, either BUS-1 or BUS-2 can be used. They enable the controllers to be "daisy-chained" together, and form a network that allows simulcast, trunking and other data to pass among them.
*PPS signal can be shared with other UC-FR5300 through the [BUS] connectors.

NOTE: BE SURE to connect a LAN cable of 1 m (3.3 feet) or less.

ⓘ The illustration below describes one example of a connection for the Trunking mode.

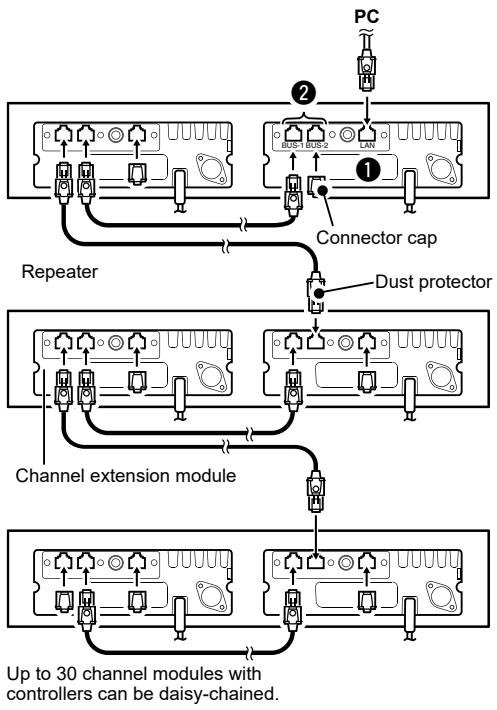

Up to 30 channel modules with controllers can be daisy-chained.

THE SETTING SCREEN OF THE UC-FR5300

NOTE:
- Microsoft Edge (Chromium based) is a recommended web browser.
- Enable JavaScript® and set to accept cookies on your web browser to correctly display the setting screen.
- The Setting screen may not be correctly displayed, depending on the browser.

◇ Accessing the setting screen

NOTE: You must wait to launch the web browser until the controller system software startup is completed. It typically takes 2 ~ 3 minutes for the controller to startup the application.

1. Connect the LAN cable between the controller's [LAN] connector and a PC, and then turn ON the repeater.
2. Before accessing the Setting screen, change the IP address of the PC to 192.168.0.XXX* (A subnet mask should be 255.255.255.0) on the Network & Internet setting screen.
   * Replace XXX with any number between 1 and 254 (except 11).
   ⓘ Refer to the Operating System's manual for details.
3. Open your web browser, enter "http://192.168.0.11" (default IP address of the UC-FR5300) into the address bar, and then push [Enter].
   • The Login Authentication window is displayed.
   ⓘ Ask your system administrator for details.

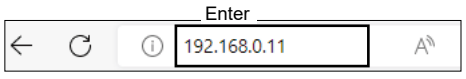

4. Enter "cbadmin" (default user name) and "ucfr5300" (default password) in their respective input field in the Login Authentication window, and then click <Sign in>.



• The Change Password screen is displayed.

5. The password must be changed to one other than the default password. Enter a new password into the "password" column and the "re-entry" column, and then click <WRITE>.
   ⓘ The password should be 8 to 16 alphanumeric characters (A to Z, a to z, 0 to 9).

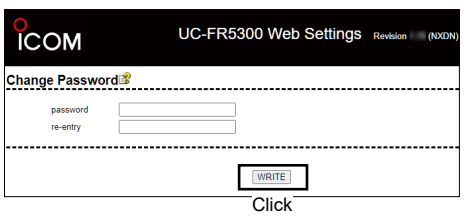

• The Top Menu screen is displayed.

TIP: You can change the user name and password in the Setting screen. Refer to the Help window of the Setting screen for details.

◇ Opening the help window

The Setting screen of the controller has a help window to describe functions and settings.
If you don't understand the meaning of an item, or how to configure the controller, click a question mark icon on the screen to open the help window.

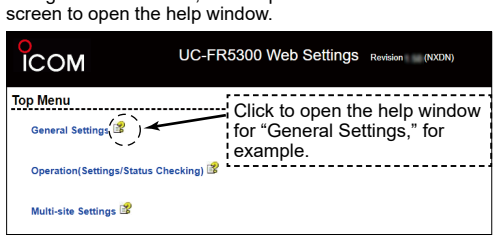

◇ Initialization

You can reset all set contents, including the network settings of the controller, to the factory default from the PC.

1. Connect the controller to the PC, and then turn ON the repeater.
2. Open your web browser, enter the initialize address into the address bar, and then push [Enter].
   • The initialize screen is displayed.
   ⓘ **Initialize address:** http://(IP address):8080/init.html
   ⓘ When the IP address of the controller is 192.168.0.11*, enter "http://192.168.0.11:8080/init.html" as the initialize address.
   * The IP address is an example only. Check the IP address of the controller.



3. After checking the box "Yes, I agree," click <RESET> to initialize the settings.

TIP: If you use the UC-FR5300, you can select whether or not to reset the Network settings as well as other settings. Refer to the help window for details.

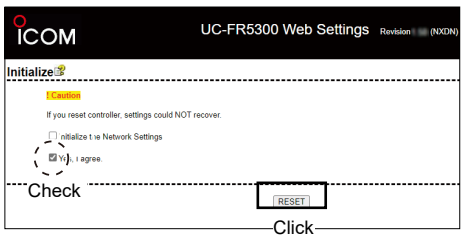

ⓘ This screen may differ slightly, depending on the Operating System or web browser version.